Doc. N.° 2TFH000039A1001 - ECN000207751 - Rev. F

SACE Tmax XT

Sganciatore differenziale RC Sel - XT5
Modular residual current device RC Sel - XT5
Differentialauslöser RC Sel - XT5
Dèclencheur diffèrentel RC Sel - XT5
Relé differencial RC Sel - XT5
剩余电流装置模块 RC Sel - XT5

XT5

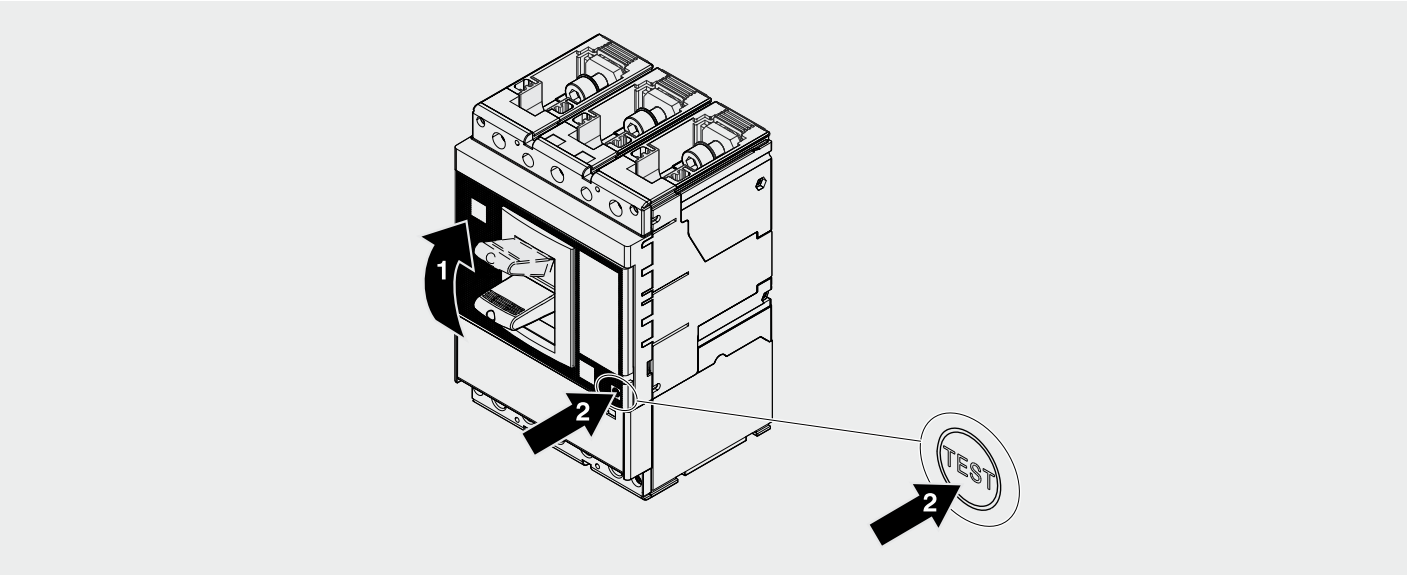

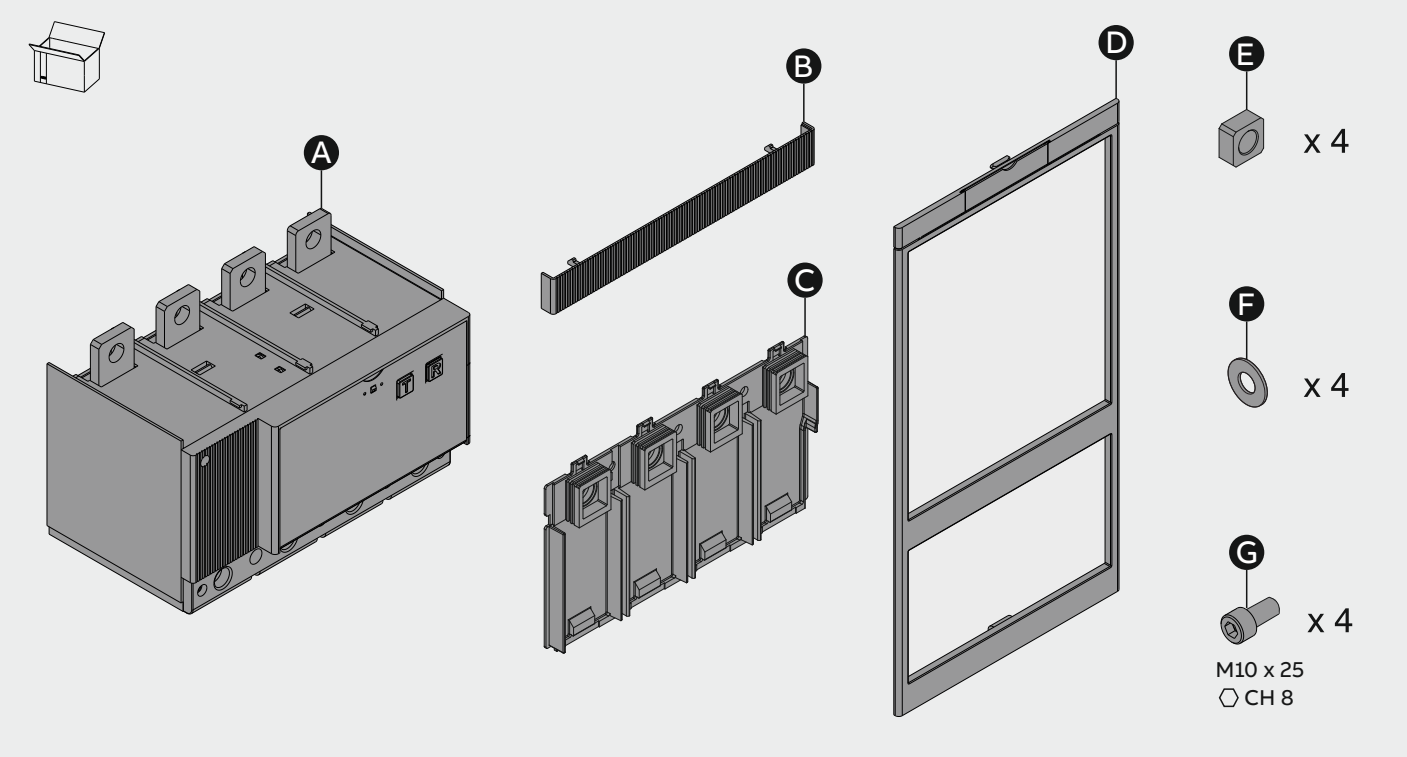

1 Recommended installation conditions - XT5 AC

- Usare cavi/barre isolate o capocorda isolati o eseguire prove di tipo specifiche sull'installazione.
- Use insulated cables/bars or insulated cable terminals or perform specific type tests on the installation.
- Isolierte Kabel/Sammelschienen oder isolierte Kabelschuhe verwenden oder spezifische Typprüfungen an der Anlage ausführen.
- Utiliser câbles/barres isolées ou des cosses isolées ou réaliser un test de type spécifique sur l'installation.
- Usar cables/barras aislados o terminales aislados o bien ejecutar pruebas de tipo específicas en la instalación.
- 在安装时使用绝缘电缆/绝缘杆，或绝缘接线片，或执行特定的测试。

Terminal type				F	EF (2)	ES	R	FC CuAl 1x35...185mm² 1x120...240mm²	FC CuAl 2x70...240mm²
Ue ≤ 500V	Supply side	BOTTOM / TOP	Back shield	–	S_T (1)	S_T (1)	S_T	–	S_T
			Phase barrier	–	S_T - 100 mm	S_T - 200 mm	–	–	S_T - 100 mm
			Terminal cover	–	–	–	S_T	–	–
Ue > 500V	Supply side	TOP	Back shield	–	S_T	S_T	S_T	–	S_T
			Phase barrier	S_{CB} - 25 mm	S_T - 100 mm	S_T - 200 mm	–	S_{CB} - 25 mm	S_T - 100 mm
			Terminal cover	–	–	–	S_T	–	–

(1) Mandatory only for XT5 with breaking capacity V, X
(2) At 690V insulate front panel of the enclosures only for XT5 with breaking capacity L, V, X according to figure 2
S_{CB} - Mandatory installation - Supplied as standard with circuit-breaker, not available in the loose terminals kit
S_T - Mandatory installation - Supplied as standard with the terminals kit

2 XT5 AC

At 690V insulate front panel of the enclosures only for XT5 with breaking capacity L, V, X

Dimension C must be choose in order to cover all the height of the front door/back panel

To avoid enclosures door insulation Fd≥156mm

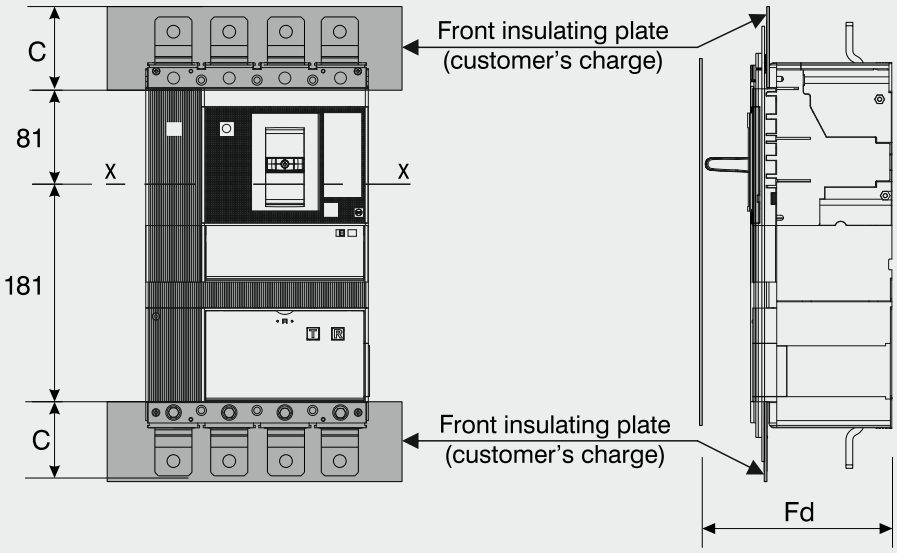

3

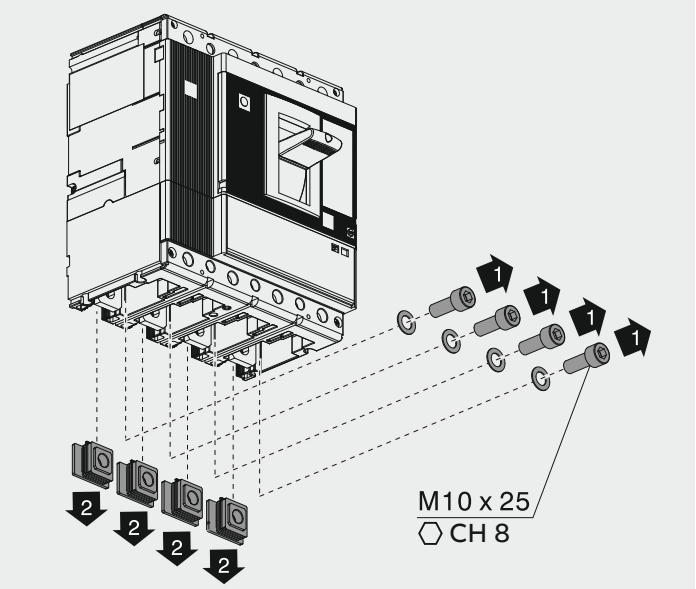

4

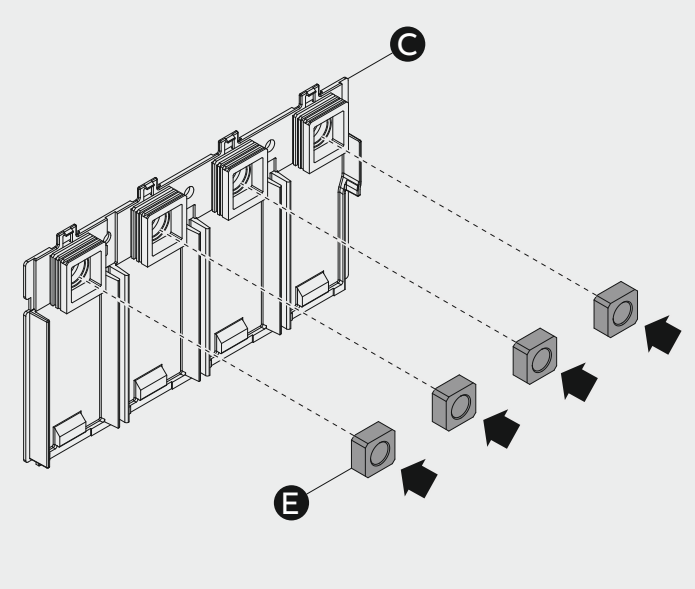

5

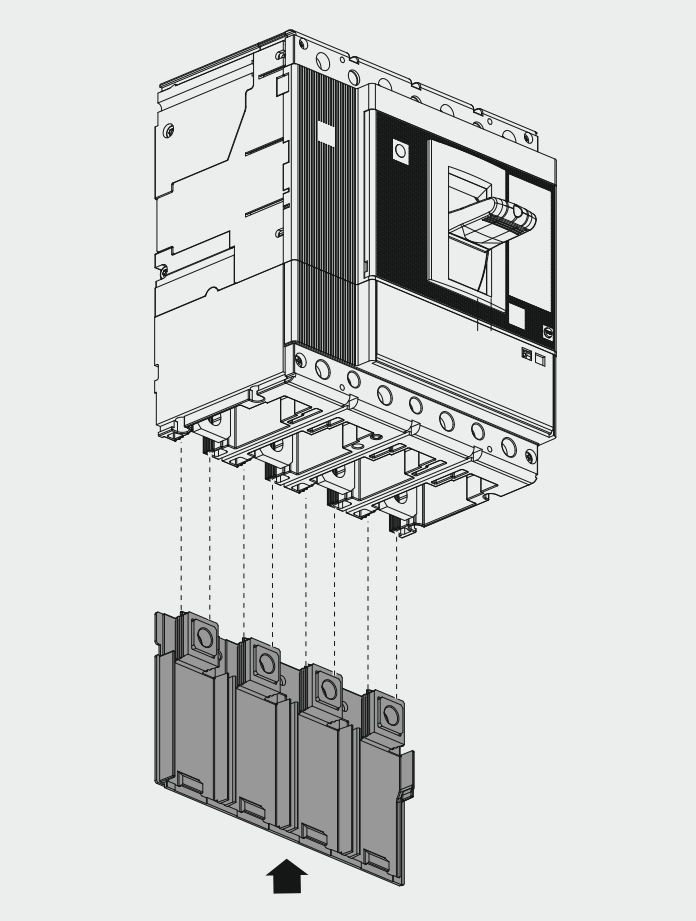

6

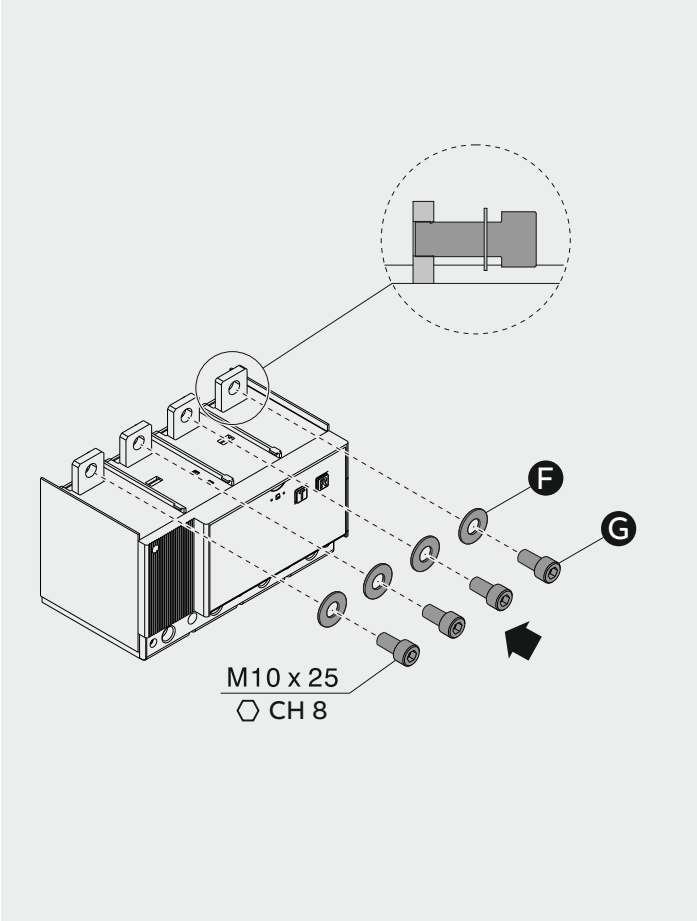

7

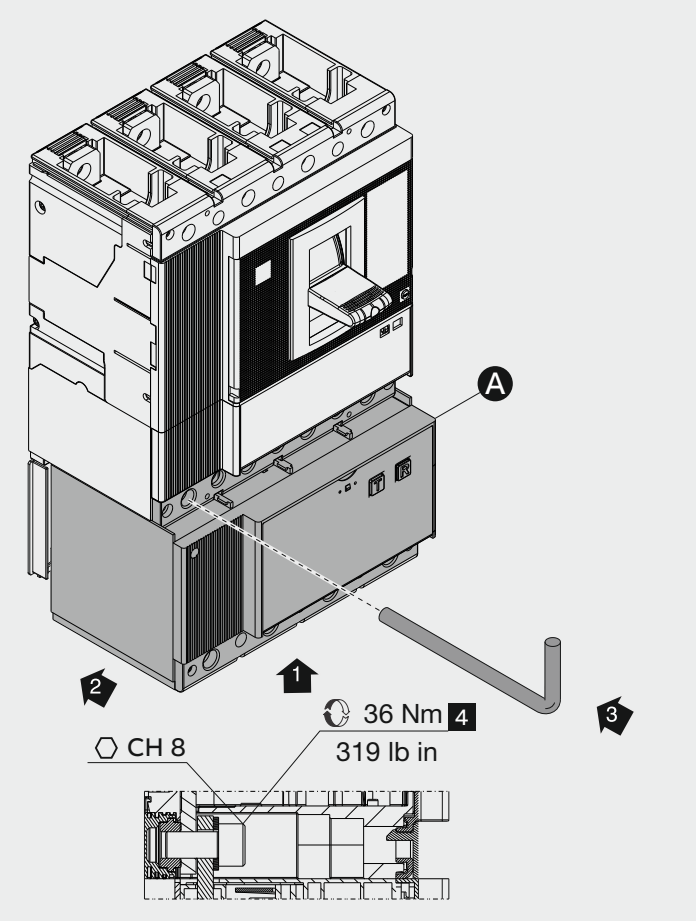

8

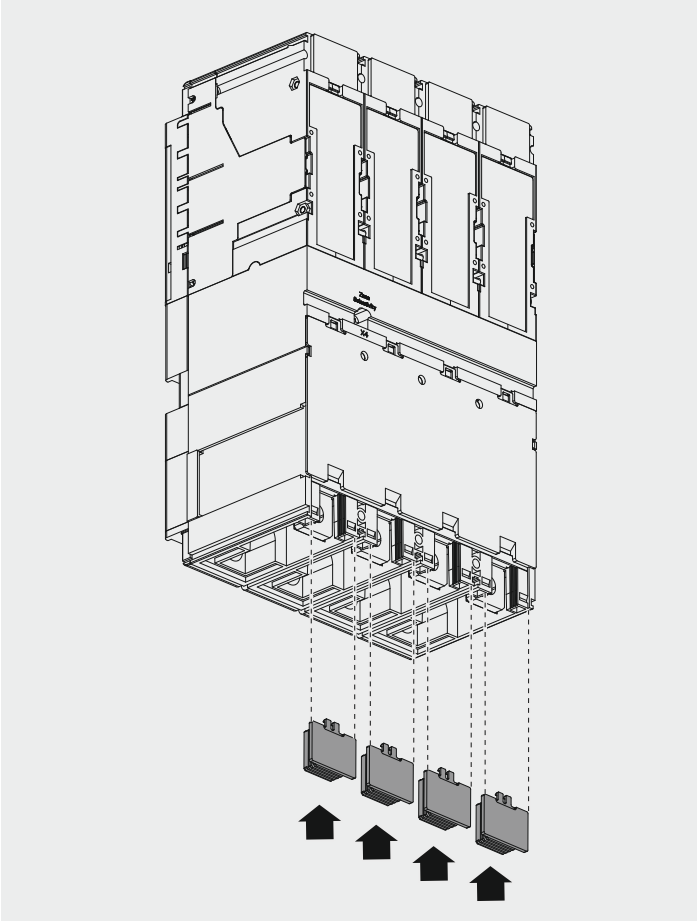

9

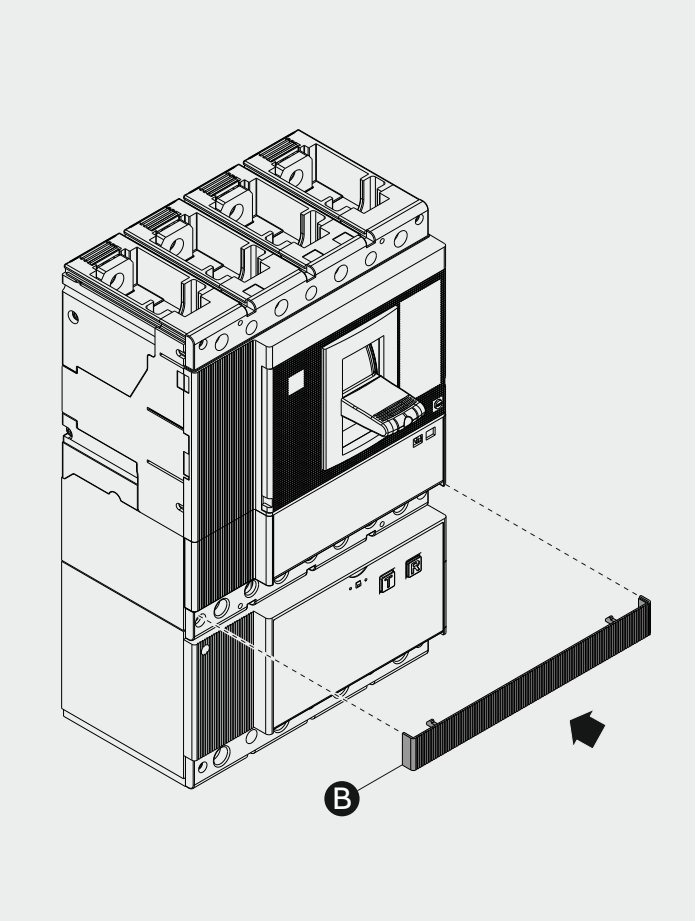

10

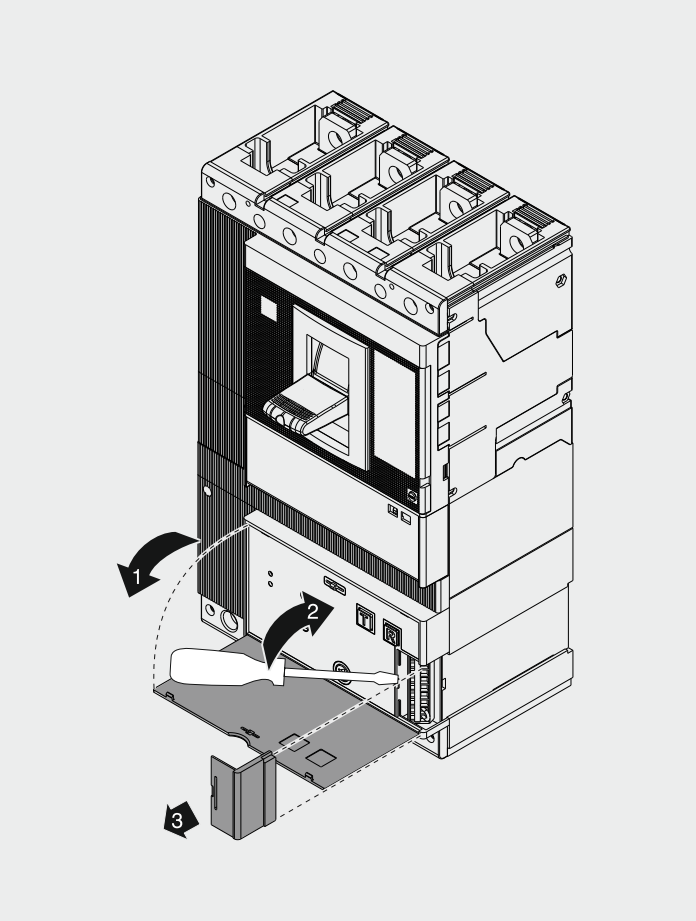

11

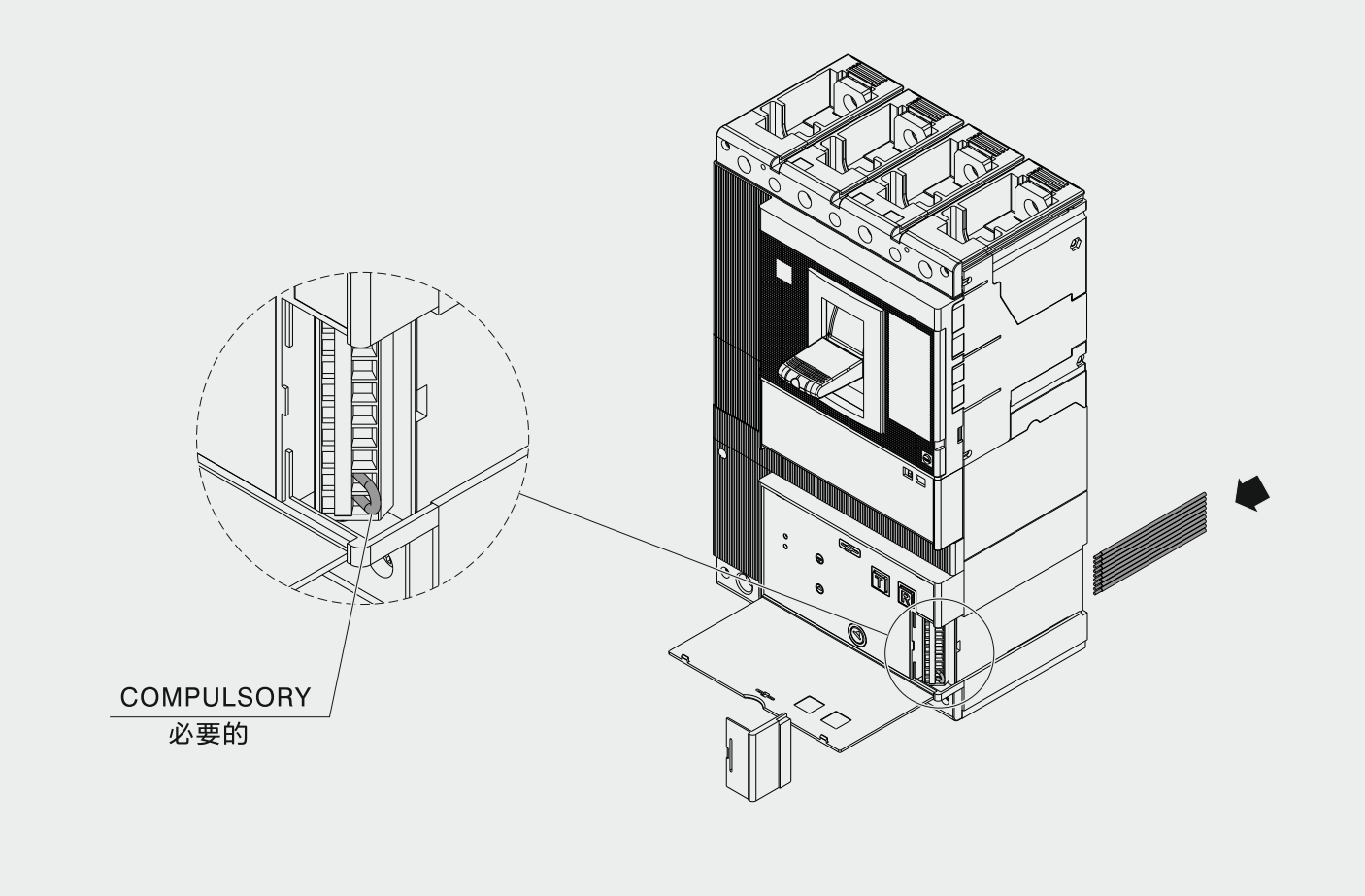

12

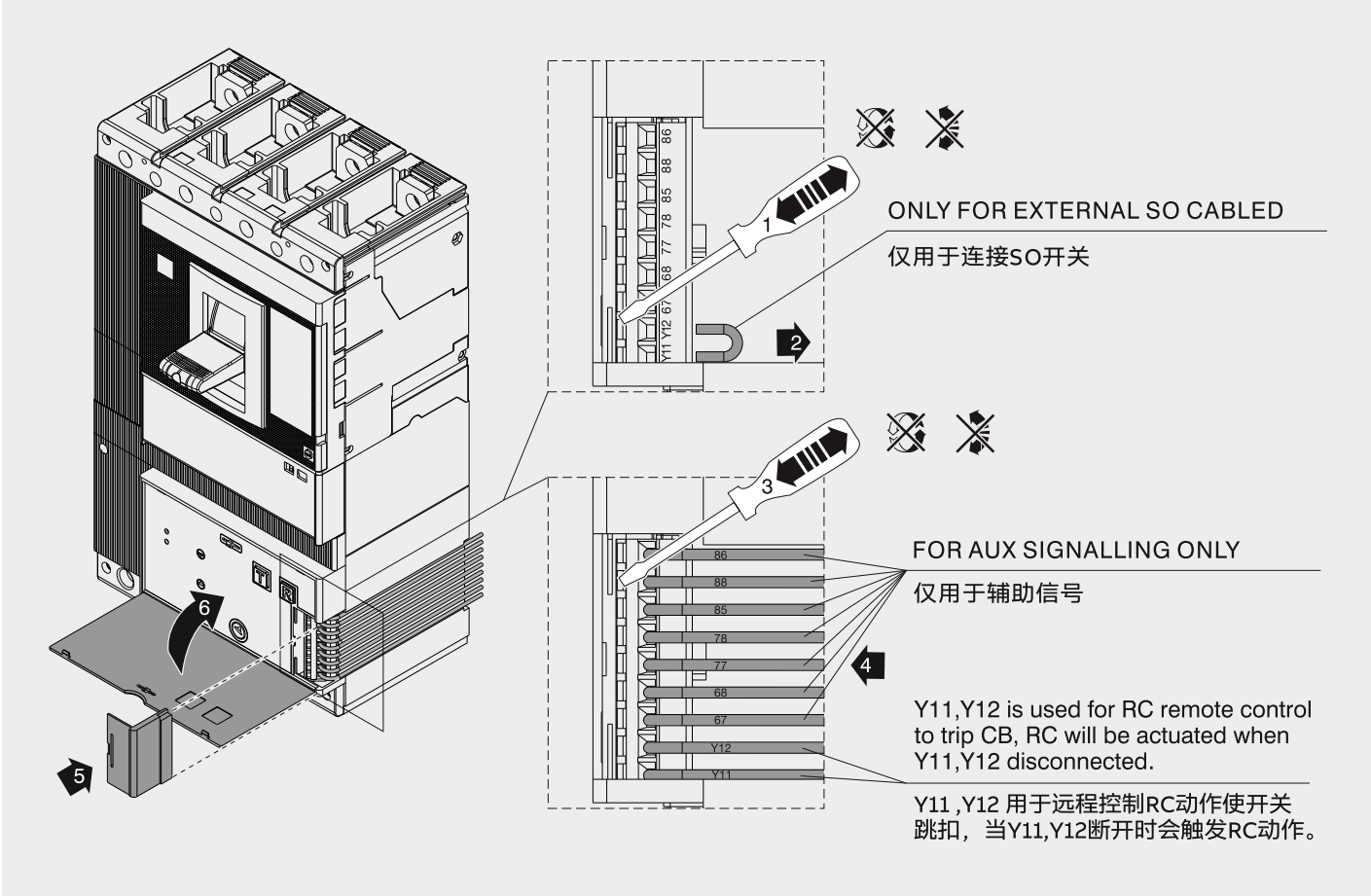

13

TEST: solo per prova di isolamento impianto. Effettuare il test d'isolamento con indicatore in posizione TEST.
ATTENZIONE: Questa posizione di test è obbligatoria per effettuare il TEST di isolamento. Il TEST di sgancio del differenziale deve essere invece eseguito agendo sul pulsante TEST indicato in fig. 20.

TEST: only for insulation test of the installation. Run the insulation test with indicator in the TEST position.
WARNING: This test position is mandatory in order to perform the insulation TEST. The residual current release TEST must, instead, be performed using the TEST button indicated in fig.20.

TEST: nur für isolationsprüfung der Anlage. Die Isolationsprüfung mit abgeklemmter der Anzeiger in Position TEST.
ACHTUNG: Diese Test-Position ist obligatorisch, um den TEST der Isolierung auszuführen. Der TEST zur Auslösung der Fehlerstrom-Schutzeinrichtung ist dagegen auszuführen, indem man die TEST-Taste so betätigt, wie es in Abb. 20 zu sehen ist.

TEST: seul pour essai de l'isolemet de l'installation. Effectuer le test d'isolement avec indicateur en position de TEST.
ATTENTION: Cette position d'essai est obligatoire pour effectuer l'ESSAI d'isolement. L'ESSAI de déclenchement doit par contre être effectué en agissant sur le bouton-poussoir TEST indiqué dans la fig.20.

TEST: solo para pruieba de aislamiento de la instalaciòn. Realizar el test de aislamiento con indicador en posición PRUEBA.
ATENCIÓN: Esta posición de prueba es obligatoria para efectuar la PRUEBA de aislamiento. La PRUEBA de disparo del diferencial deberá efectuarse en cambio con el pulsador PRUEBA indicado en la fig.20.

测试：仅用于装置的绝缘测试。绝缘测试时必须将测试旋钮置于“TEST”位置。
警告：进行绝缘测试时必须将测试旋钮旋转到图中指示的位置。若进行脱扣性能测试必须按图“20”进行设置。

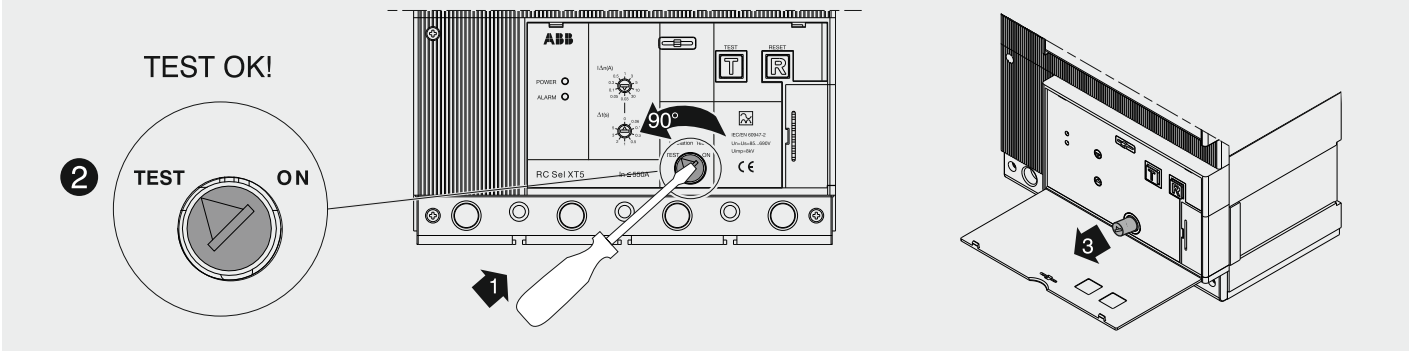

14

Dopo aver effettuato il test di isolamento, mettere l’indicatore in posizione ‘ON’.

Set the indicator in ON position after insulation test.

Die Anzeige nach dem Isolationstest in die Position 'ON' setzen.

Après avoir effectué le test d'isolement, placer l'indicateur sur la position 'ON'.

Después de haber efectuado la prueba de aislamiento, poner el indicador en posición ‘ON’.

绝缘测试完成后必须将测试旋钮设置为 "ON"。

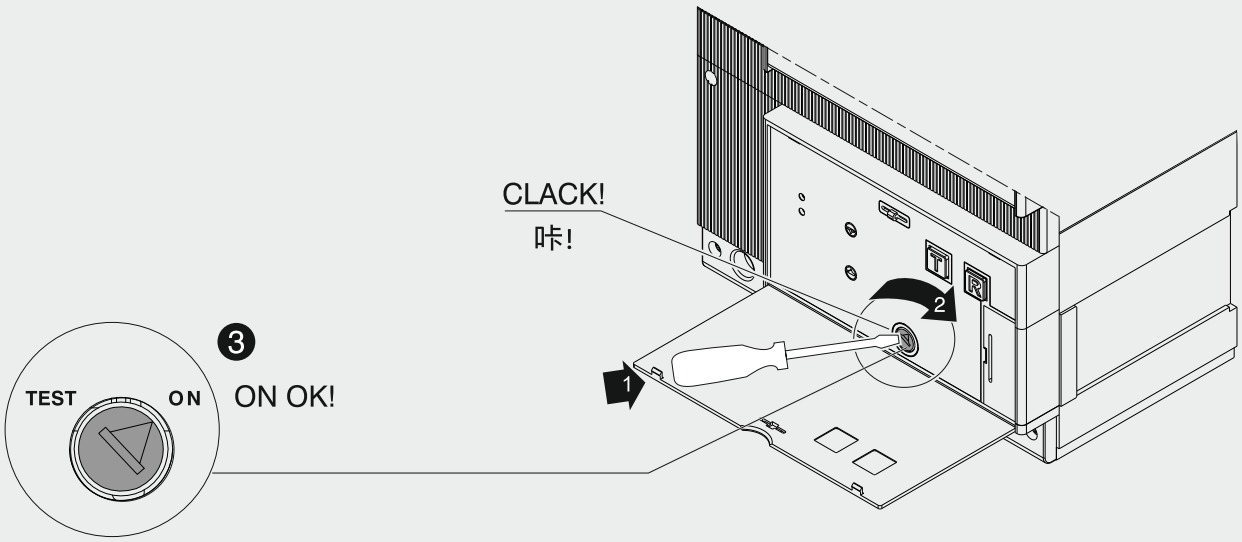

15

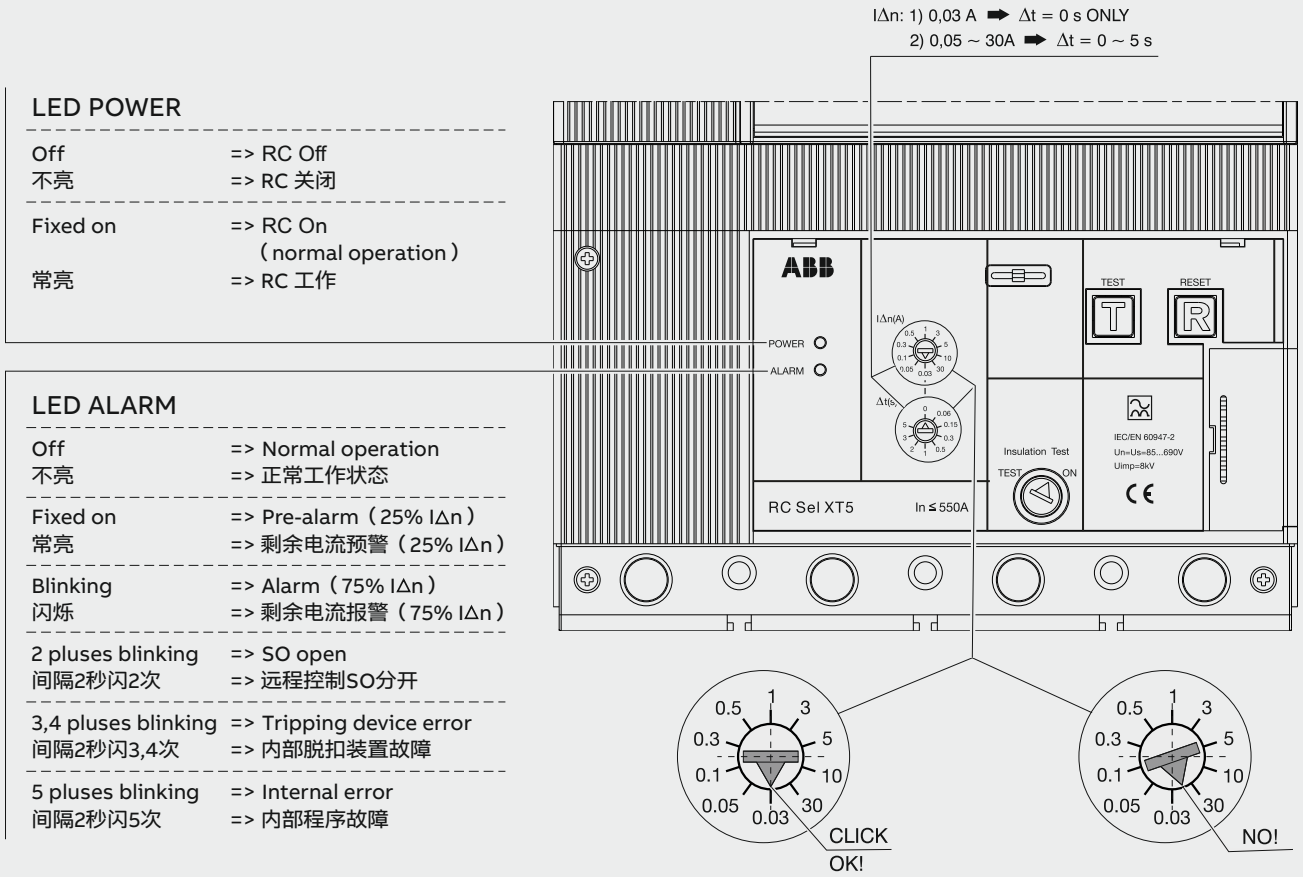

16

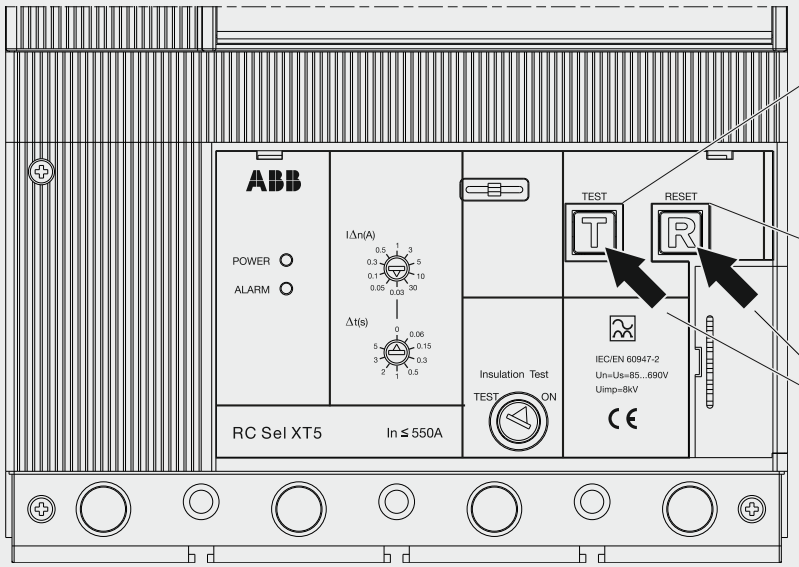
- Button to TEST the residual current release.
- 脱扣试验的按钮
- Button to RESET the residual current after release.
- 当剩余电流设备脱扣时，需要先按RESET按钮复位后,才能闭合开关。
Push
按
ABB
POWER
ALARM
TEST
RESET
IΔn(A)
Δt(s)
Insulation Test
TEST
ON
IEC/EN 60947-2
Un=Us=85...690V
Uimp=8kV
RC Sel XT5
In ≤ 550A

17

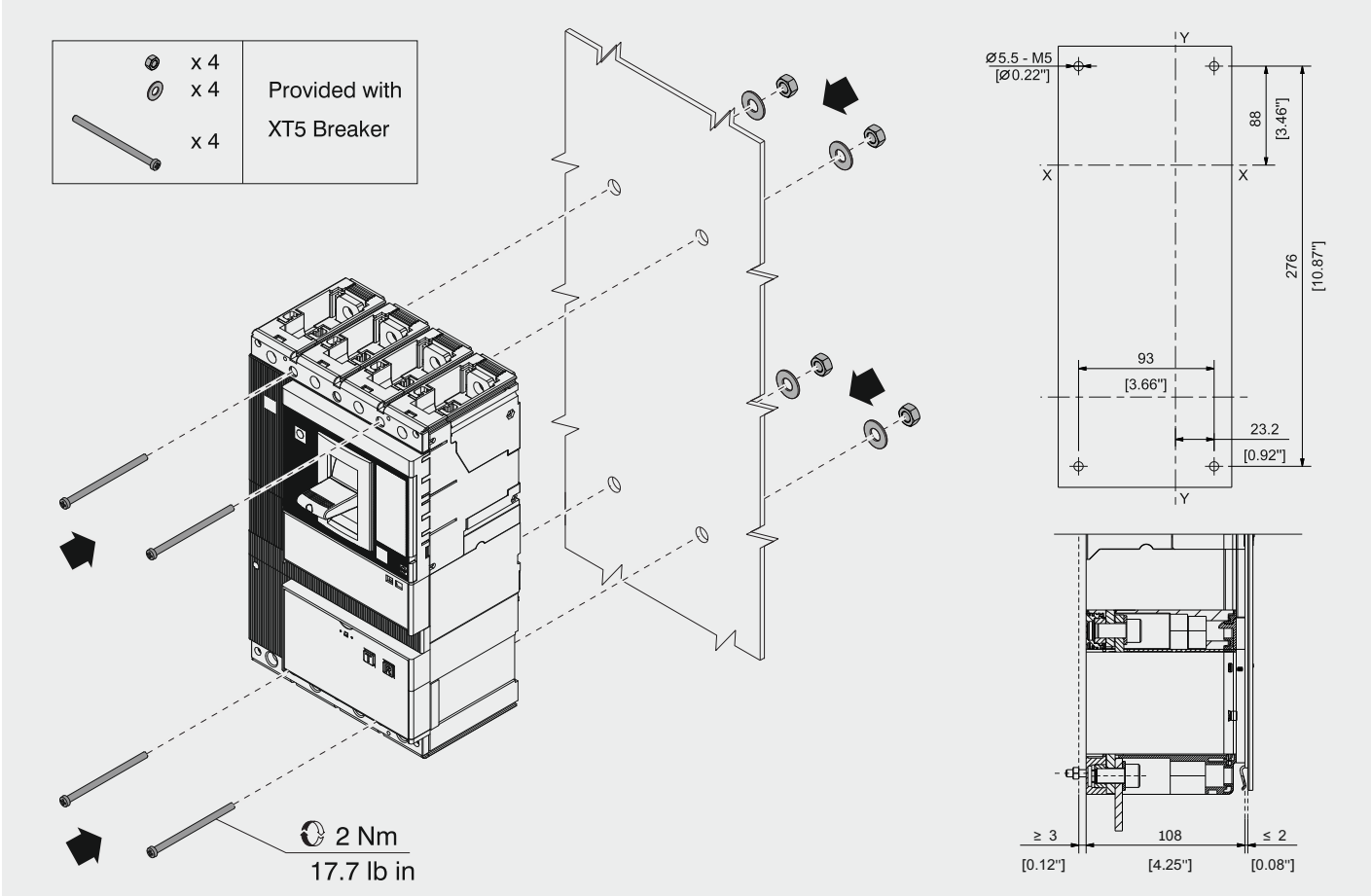
x 4
x 4
x 4
Provided with
XT5 Breaker
2 Nm
17.7 lb in
Ø5.5 - M5
[Ø0.22"]
88
[3.46"]
276
[10.87"]
93
[3.66"]
23.2
[0.92"]
X
X
Y
Y
≥ 3
[0.12"]
108
[4.25"]
≤ 2
[0.08"]

18

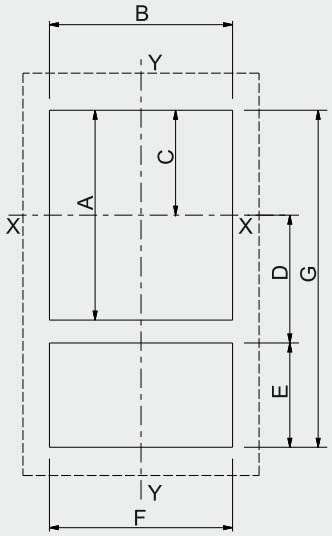

	WITHOUT FLANG	WITH FLANG
A	163.5 [6.44"]	
B	141.5 [5.57"]	147.5 [5.81"]
C	81.8 [3.22"]	84.8 [3.34"]
D	101.5 [4.00"]	
E	80.3 [3.16"]	
F	141.5 [5.57"]	147.5 [5.81"]
G		269.5 [10.61"]

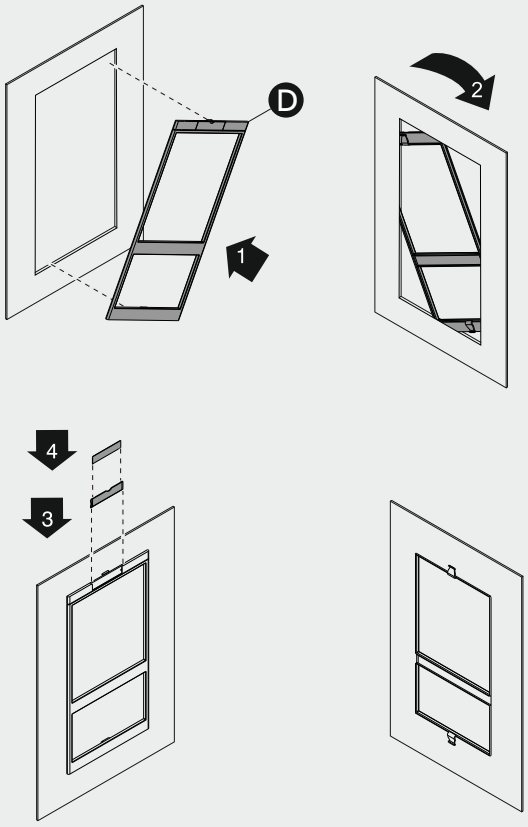

19

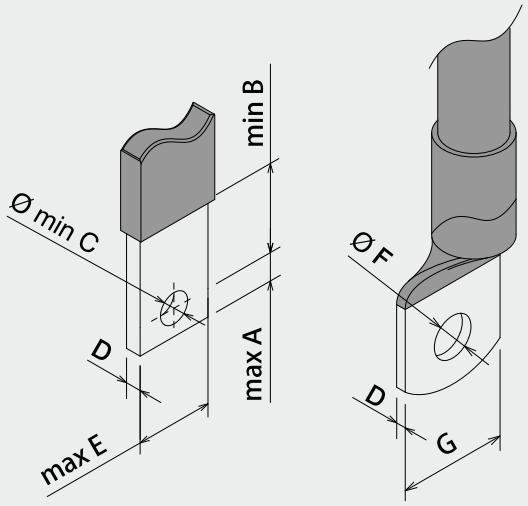

A		12 mm
B		11 mm
C		10,5 mm
D	max	10 mm
	min	5 mm
E		32,5 mm
F		10,5 mm
G		32,5 mm

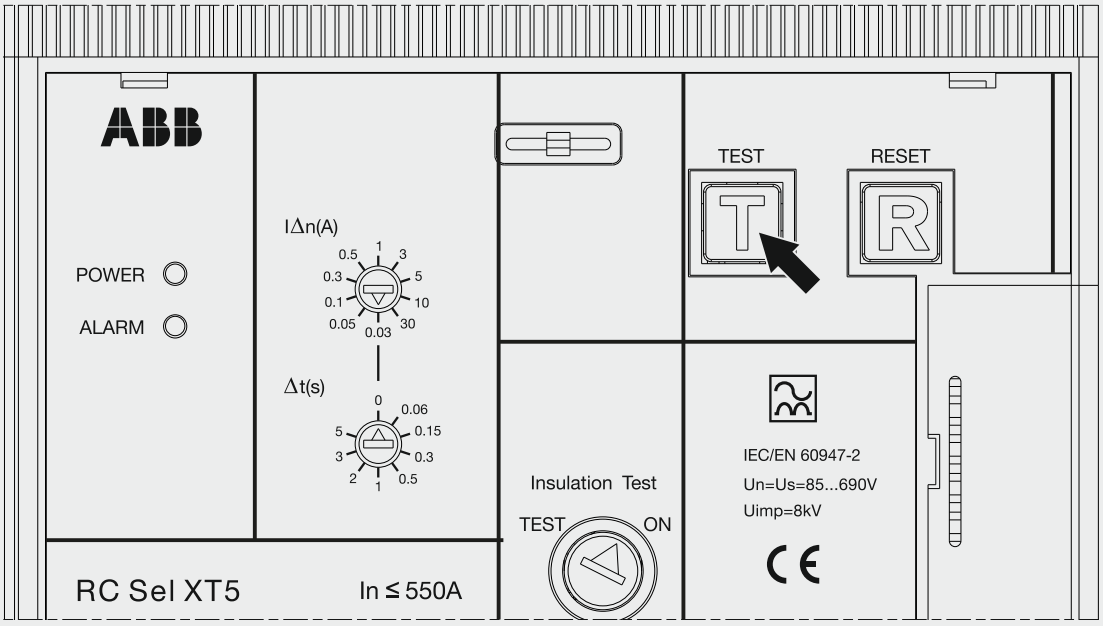

Con sganciatore differenziale alimentato premere il pulsante rosso di test 'T' del differenziale e verificare l'apertura dell'interrutore.

Press the red test button ‘T’ with the residual current release powered and check to make sure that the circuit-breaker opens.

Mit gespeistem Fehlerstromauslöser die rote Test-Taste T des Fehlerstromauslösers drücken und sicherstellen, dass der Leistungsschalter ausgeschaltet ist.

Le déclencheur différentiel étant alimenté appuyer sur le bouton rouge “T” du différentiel et vérifier l’ouverture du disjoncteur.

Con relé diferencial alimentado pulsar el pulsador rojo de test 'T' del diferencial y verificar la apertura del interruptor.

给剩余电流脱扣器上电后按下测试按钮“T” ,检查并确认断路器是断开状态。

Terminali Terminals Anschlusse Prises Terminales 端子类型	Codici Codes Codes Codes Códigos 物料编号	Istruzioni d'installazione Installation instructions Installationsanleitung Instructions pour l'installation Instrucciones de instalación 安装说明

F - F

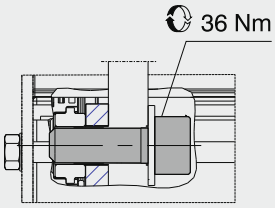

1SDA104730R1	3pcs
1SDA104731R1	4pcs

1SDH002011A1801

F - EF

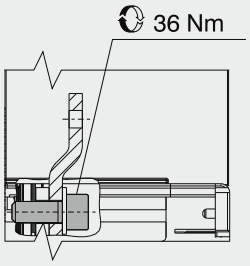

1SDA104734R1	3pcs
1SDA104735R1	4pcs

1SDH002011A1802

F - ES

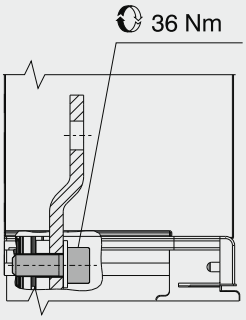

1SDA104738R1	3pcs
1SDA104739R1	4pcs

1SDH002011A1803

F - R

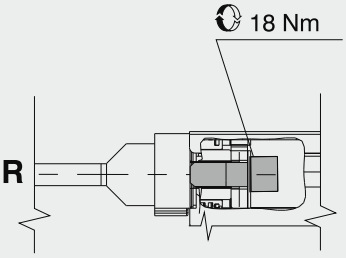

1SDA104760R1	3pcs
1SDA104761R1	4pcs

1SDH002011A1807

Terminali Terminals Anschlusse Prises Terminales 端子类型	Codici Codes Codes Codes Códigos 物料编号	Istruzioni d'installazione Installation instructions Installationsanleitung Instructions pour l'installation Instrucciones de instalación 安装说明

F - FC CuAl 35mm²/185mm²

1SDA104746R1	3pcs
1SDA104747R1	4pcs

1SDH002011A1804

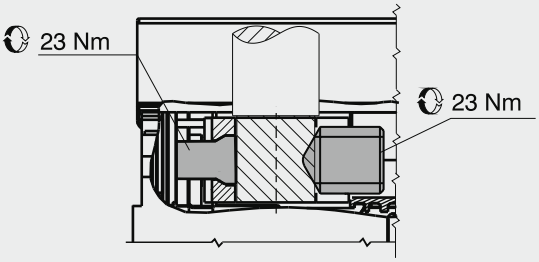

F - FC CuAl 120mm²/240mm²

1SDA104742R1	3pcs
1SDA104743R1	4pcs

1SDH002011A1805

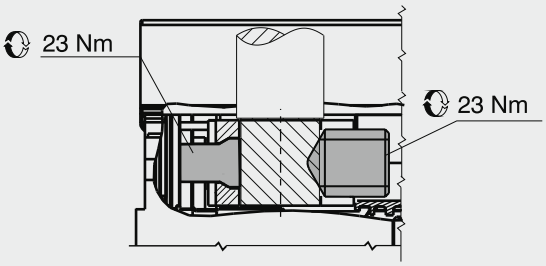

F - FC CuAl 2x70mm²/240mm²

1SDA104748R1	3pcs
1SDA104749R1	4pcs

1SDH002011A1806

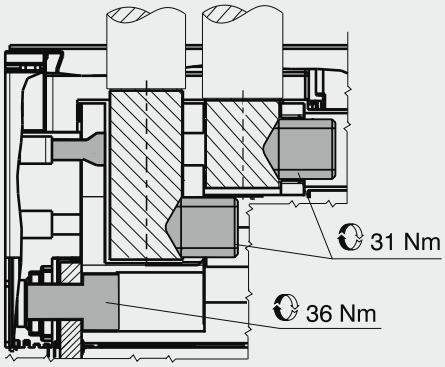

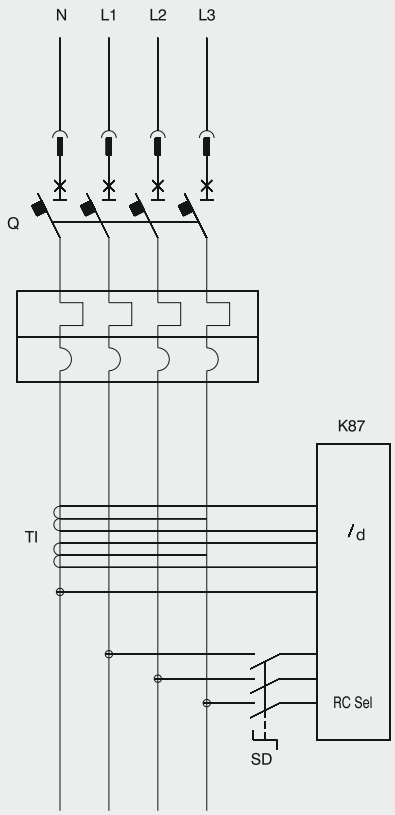

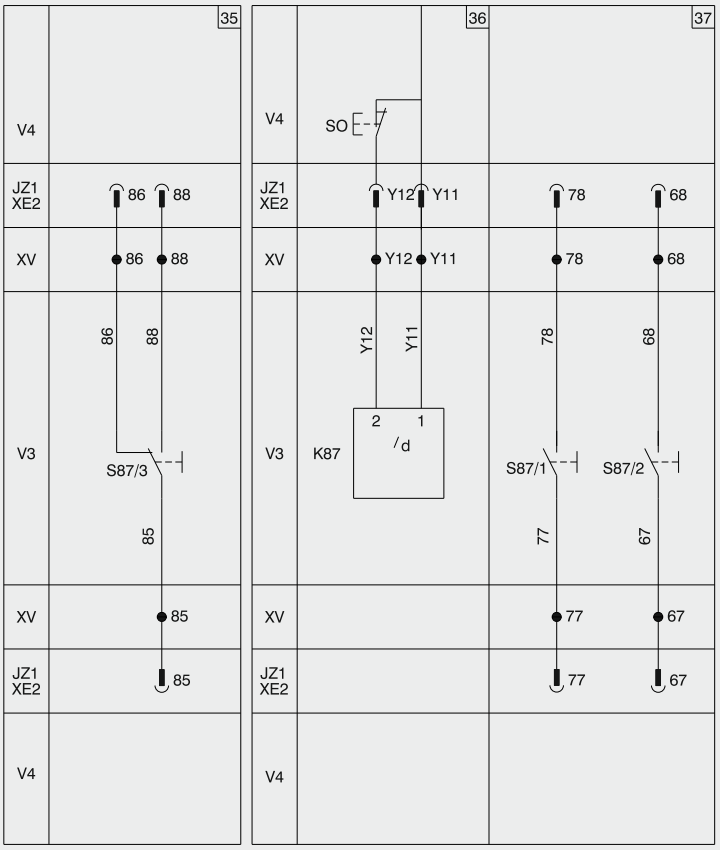

J.. = Connectors for the auxiliary contacts of the withdrawable version circuit-breaker; extraction of the connectors takes place at the same time as that of the circuit-breaker

= 抽出式断路器辅助触点用连接器
（当断路器抽出时该连接器也同时拔出）

K87 = Residual current release type RC Sel XT5
= 剩余电流脱扣器 RC Sel XT5

S87/1 = Contact for electrical signalling of pre-alarm of the residual current release type RC Sel XT5

= RC Sel XT5 剩余电流脱扣器预报警电气信号触点

S87/2 = Contact for electrical signaling of alarm of the residual current release type RC Sel XT5

= RC Sel XT5 剩余电流脱扣器报警电气信号触点

S87/3 = Contact for electrical signalling of circuit-breaker open due to tripping of the residual current release type RC Sel XT5

= RC Sel XT5 剩余电流脱扣器跳扣导致断路器分断的电气信号触点

SD = Power supply Isolator of the RC sel resldual-current release
= RC sel 剩余电流脱扣器的电源隔离开关

SO = Pushbutton or contact for opening the circuit-breaker
= 断路器分闸按钮或触头

TI = Toroidal current transformer
= 电流互感器

Q = Main switch
= 主开关

V3 = Residual current release applications
= 剩余电流脱扣器应用

V4 = Indicative apparatus and connections for control and signalling, outside the circuit-breaker

= RC Sel XT5 断路器外接的控制和信号装置及接线

XE..= Nine-way connector for the plug-in version circuit-breaker auxiliary contacts
= 插入式断路器辅助回路用九孔连接器

XV = Terminal boxes of the circuit-breaker applications
= 断路器应用端子盒

© Copyright 2019 ABB. All rights reserved.